Differential Pressure Transmitters
Model 890.09.2190

Applications

- For gaseous and liquid media that are not highly viscous or crystallising
- Differential pressure measurements between flow and return in heating systems
- Technical building equipment, filter plants
- Drinking and service water treatment
- Monitoring and control of pumps in pressure boosting and fire-extinguishing systems

Special Features

- Compact size
- 2.5-fold overpressure safety
- Very good price / performance ratio
- Robust instrument design

Differential Pressure Transmitter Model 890.09.2190

Dimensions in mm

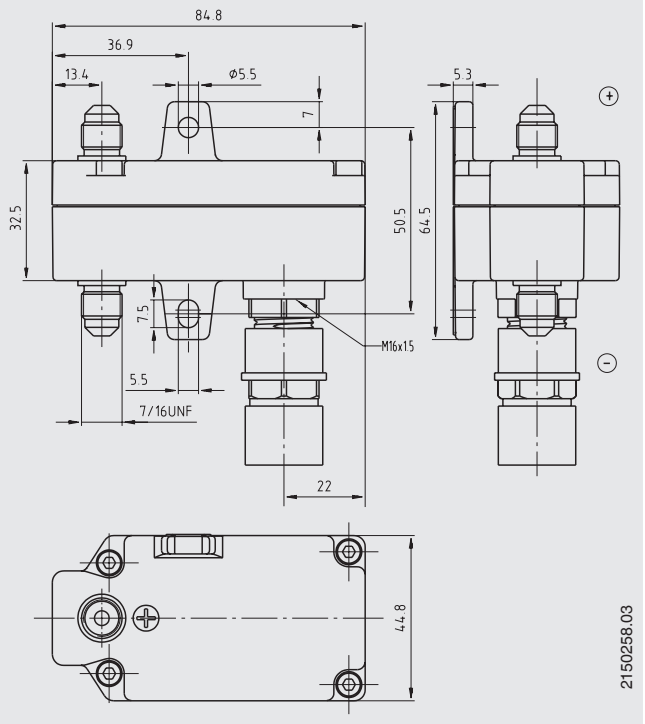

Description

The differential pressure transmitter has a ceramic differential pressure sensor with thick film technology, which works according to the principle of a Wheatstone bridge.
The differential pressure deflects the ceramic diaphragm, thereby changing the strain gauge signal, which is amplified to a standard current output signal by the integrated electronics.
The sensor is mounted between the two case halves and sealed by o-rings. The sensor is electrically connected by means of a 3-wire cable which is led to the room for service connections through a protective tube.

The differential pressure transmitter has 2 lugs for mounting.

Specifications		Model 890.09.2190
Differential pressure range	bar	0 ... 1, 0 ... 2, 0 ... 4, 0 ... 6 and 0 ... 10
max. working pressure (stat.)	bar	21
Overpressure safe		
either side max.	bar	2.5 x end value of measuring range, however max. 21 bar
Pressure connections	wetted	2 x 7/16 UNF male, Cu alloy
Accessories [1]	wetted	2 capillary extensions, Cu alloy, Ø 3 x 0.75,
		length 750 mm, winding diameter 66 mm, with 7/16 UNF union nuts
	wetted	2 gauge adapters R 3/8 (optionally R 1/2) x 7/16 UNF, Cu alloy
Media chamber	wetted	Zinc diecast, black painted
Sensor element	wetted	Al_2O_3 ceramic
Sealings	wetted	FPM/FKM
Power supply *UB*	DC V	18 < *UB* ≤ 30 (24 V nominal voltage)
Output signal		4 … 20 mA, 3-wire
Permissible max. load *RA*		*RA* ≤ 500 Ohm
Current supply	mA	max. 32 (typical)
at current limitation	mA	max. 36 (at overpressure)
Accuracy		
linearity	% of span	± 1
hysteresis	% of span	± 1
Temperature coefficient	% of span / 10 K	0.2
Zero offset	mA	± 0.1
Ambient temperature	°C	-10 … + 50
Medium temperature	°C	-10 … + 80
Storage temperature	°C	-10 … + 50
Electrical connection		Connection cable (0.34 mm²) with 2.5 m length, square-cut at the end
		Cable with plastic protective tube and rotatable gland at free cable end
		Options: ■ Other lengths
		■ Outer cable end with cable end sleeves
Wiring protection		Short-circuit-proof, after eliminating the fault the operability is recovered
Ingress protection		IP 55 per EN 60 529 / IEC 529
Weight	kg	Approx. 0.3

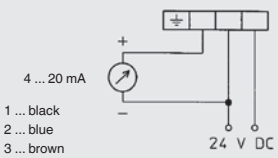

Accessories:
Capillary extension [1]

1) Included in scope of delivery

Accessories:
Fixing bracket [1]

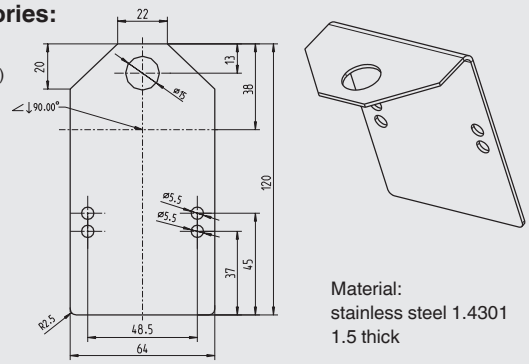

Ordering information

Model / Measuring range / Cable length

The specifications given in this document represent the state of engineering at the time of publishing.
We reserve the right to make modifications to the specifications and materials.

WIKA Alexander Wiegand SE & Co. KG
Alexander-Wiegand-Straße 30
63911 Klingenberg/Germany
Tel. (+49) 9372/132-0
Fax (+49) 9372/132-406
E-mail info@wika.de
www.wika.de